2.5t A series long wheelbase mast specification:

Type	Model	lifting height	Lowered	Overall height		Free lifting height		Tilting range		Capacity (Mast vertical to ground)			
				With backrest	Without backrest	With backrest	Without backrest	FWD	BWD	Load center@500mm Single Tire	Load center@500mm Front Dual Tire	Load center@24in Single Tire	Load center@24in Front Dual Tire
										2.5tLW	2.5tLW	5000	5000
		mm	mm	mm	mm	mm	mm	(°)	(°)	kg	kg	lbs	lbs
2-stage wide mast	M250	2500	1786	3556	3234	140	140	5	10	2500	2500	5000	5000
	M270	2700	1886	3756	3434	140	140	5	10	2500	2500	5000	5000
	M300	3000	2006	4056	3734	140	140	5	10	2500	2500	5000	5000
	M330	3300	2186	4356	4034	140	140	5	10	2500	2500	5000	5000
	M350	3500	2286	4556	4234	140	140	5	10	2500	2500	5000	5000
	M360	3600	2336	4656	4334	140	140	5	10	2500	2500	5000	5000
	M400	4000	2586	5056	4734	140	140	5	10	2500	2500	5000	5000
	M430	4300	2751	5356	5034	140	140	5	6	2500	2500	5000	5000
	M450	4500	2861	5556	5234	140	140	5	6	2300	2500	4600	5000
2-stage full-free lifting mast	U250	2500	1766	3556	3185	720	1091	5	10	2500	2500	5000	5000
	U270	2700	1866	3756	3385	820	1191	5	10	2500	2500	5000	5000
	U300	3000	1966	4056	3685	920	1291	5	10	2500	2500	5000	5000
	U330	3300	2116	4356	3985	1070	1441	5	10	2500	2500	5000	5000
	U360	3600	2266	4656	4285	1220	1591	5	10	2500	2500	5000	5000
	U400	4000	2516	5056	4685	1470	1841	5	10	2500	2500	5000	5000
3-stage full-free lifting mast	N430	4300	1976	5356	5019	930	1267	5	6	2300	2500	4600	5000
	N450	4500	2096	5556	5219	1050	1387	5	6	2200	2350	4400	4700
	N480	4800	2196	5856	5519	1150	1487	5	6	2100	2200	4200	4400
	N500	5000	2261	6056	5719	1215	1552	5	6	1900	2100	3800	4200
	N550	5500	2426	6556	6219	1380	1717	3	6	1400	1900	2800	3800
	N600	6000	2641	7056	6719	1595	1932	3	6	1000	1700	2000	3400
	N650	6500	2820	7556	7219	1774	2111	3	6	850	1500	1700	3000

▪ With sideshift minus 150kg,with integrated sideshift minus 100kg. ▪ With solid tyre,load capacity increase 80kg.

3.0-3.5t A series mast: (3.0t with pneumatic,3.5t with solid tyre)

Type	Model	Lifting height	Lowered overall height		Overall height				Free lifting height				Tilting range		Capacity (Mast vertical to ground)							
															Load center @500 mm				Load center @24 in			
					With backrest		Without backrest		With backrest		Without backrest		FWD	BWD	Single Tire		Front Dual Tire		Single Tire		Front Dual Tire	
			3t	3.5t	3t	3.5t	3t	3.5t	3t	3.5t	3t	3.5t	＼	＼	3t	3.5t	3t	3.5t	6000	7000	6000	7000
		mm	mm	mm	mm	mm	mm	mm	mm	mm	mm	mm	(°)	(°)	kg	kg	kg	kg	lbs	lbs	lbs	lbs
2-stage wide view mast	M250	2500	1786	1936	3652	3652	3297	3364	145	145	145	145	5	10	3000	3500	3000	3500	6000	7000	6000	7000
	M270	2700	1886	2036	3852	3852	3497	3564	145	145	145	145	5	10	3000	3500	3000	3500	6000	7000	6000	7000
	M300	3000	2036	2186	4152	4152	3797	3864	145	145	145	145	5	10	3000	3500	3000	3500	6000	7000	6000	7000
	M330	3300	2186	2336	4452	4452	4097	4164	145	145	145	145	5	10	3000	3500	3000	3500	6000	7000	6000	7000
	M350	3500	2286	2436	4652	4652	4297	4364	145	145	145	145	5	10	3000	3500	3000	3500	6000	7000	6000	7000
	M360	3600	2336	2486	4752	4752	4397	4464	145	145	145	145	5	10	3000	3500	3000	3500	6000	7000	6000	7000
	M400	4000	2586	2686	5152	5152	4797	4864	145	145	145	145	5	10	2850	3250	2900	3500	5700	6500	5800	7000
	M430	4300	2751	2836	5452	5452	5097	5164	145	145	145	145	5	6	2700	3000	2750	3400	5400	6000	5500	6800
	M450	4500	2861	2936	5652	5652	5297	5364	145	145	145	145	5	6	2550	2850	2600	3350	5100	5700	5100	6700
	M480	4800	3026	3086	5952	5952	5597	5664	145	145	145	145	5	6	2250	2450	2500	2950	4500	4900	5000	5900
	M500	5000	3136	3186	6152	6152	5797	5864	145	145	145	145	5	6	2100	2300	2300	2800	4200	4600	4600	5600
2-stage full-free lifting mast	U250	2500	1826	1936	3652	3652	3247	3292	684	794	1089	1154	5	10	3000	3500	3000	3500	6000	7000	6000	7000
	U270	2700	1926	2036	3852	3852	3447	3492	784	894	1189	1254	5	10	3000	3500	3000	3500	6000	7000	6000	7000
	U300	3000	2036	2195	4152	4152	3747	3792	894	1053	1299	1413	5	10	3000	3500	3000	3500	6000	7000	6000	7000
	U330	3300	2186	2336	4452	4452	4047	4092	1044	1194	1449	1554	5	10	3000	3500	3000	3500	6000	7000	6000	7000
	U360	3600	2345	2495	4752	4752	4347	4392	1203	1353	1608	1713	5	10	3000	3500	3000	3500	6000	7000	6000	7000
	U400	4000	2555	2705	5152	5152	4747	4792	1413	1563	1818	1923	5	10	2850	3250	2900	3500	5700	6500	5800	7000
3-stage full-free lifting mast	N430	4300	2041	2141	5452	5452	5083	5092	899	999	1268	1359	5	6	2550	2850	2750	3350	5100	5700	5500	6700
	N450	4500	2121	2221	5652	5652	5283	5292	979	1079	1348	1439	5	6	2400	2700	2700	3200	4800	5400	5400	6400
	N480	4800	2221	2321	5952	5952	5583	5592	1079	1179	1448	1539	5	6	2250	2450	2600	2950	4500	4900	5200	5900
	N500	5000	2287	2387	6152	6152	5783	5792	1145	1245	1514	1605	5	6	2100	2300	2500	2850	4200	4600	5000	5700
	N550	5500	2451	2551	6652	6652	6283	6292	1309	1409	1678	1769	3	6	1650	1800	2350	2700	3300	3600	4700	5400
	N600	6000	2617	2717	7152	7152	6783	6792	1475	1575	1844	1935	3	6	1200	1300	2050	2300	2400	2600	4100	4600
	N650	6500	2845	2946	7652	7652	7283	7292	1703	1804	2072	2164	3	6	900	1000	1850	1900	1800	2000	3700	3800

▪ With sideshift minus 200kg,with integrated sideshift minus 100kg. ▪ For 3t truck, with solid tyre,load capacity increase 100kg.

GLOBAL SALES NETWORK

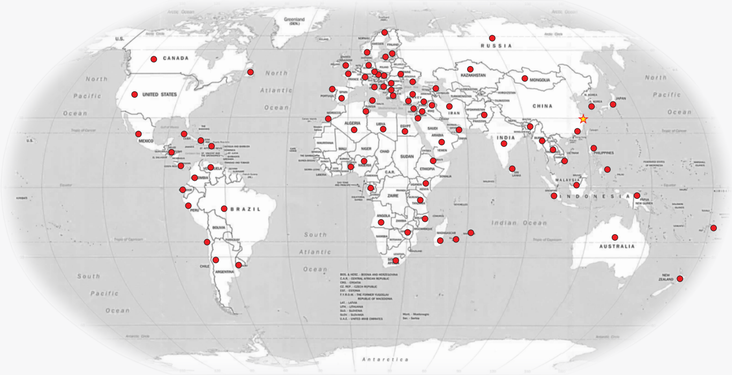

A Series

1.0/1.5/1.8/2.0/2.5/3.0/3.5t

Electric Forklift Truck

HANGCHA

CE CERTIFICATE

ISO14001: 2004

ISO9001: 2008

HANGCHA GROUP CO.,LTD.

(Zhejiang Hangcha Imp.&Exp.Co.,Ltd.)

www.hcforklift.com

Add:398 Shi Qiao Road.Hangzhou Zhejiang province,China(310022)

Factory site:No.88,Donghuan Rd.,Economic Development Zone Lin'an,Zhejiang,China(311305)

Tel: +86-571-88926755

Fax: +86-571-88926789 88132890

E-mail: sales@hcforklift.com

HANGCHA GROUP CO., LTD. Reserves the right to make any changes without notice concerning colors, equipment,or specifications detailed in this brochure, or to discontinue individual models. The colors of trucks, delivered may differ slightly from those in brochures.

2014 VERSION 1/COPYRIGHT 2014/06

HANGCHA GROUP CO., LTD.

THe newest generation A series 1-3.5t electric counter balance truck is new product series of HANGCHA. The totally new designed outline, safety, comfortable and reliability are fully improved, and the whole truck's performance is also increased.

OUTLINE

Eyeball attractive designed streamlined outline, small dimension, and metal material applied for exposed parts, all provide robust construction of A series.

COMFORTABLE

Thanks to the new designed ergonomically operator's cab, the operator can work in relax, low fatigue, and even during long shift.

Sinking type designed battery layout provides battery stability especially during turning.

Ergonomically designed small radius turning wheel, and 150mm adjustable distance of seat, both provide better operator's comfort of different operators.

Soft landing system is applied for A series. When the forks lows to 60-100mm to ground, the soft landing system is auto operated, and to avoid the forks dashing against the ground.

New designed broad view mast provides better forward view ability.

Big LED dashboard is easy to see and provides friendly human-computer interaction and with running hours, self diagnosis function and the battery power shown.

Low noise, energy saving and no exhaust emission, all meet environment friendly requirement.

AC TECHNOLOGY

The AC technology offers numerous advantages to HANGCHA A series trucks.

Maintenance free driving motor is no need to replace the carbon brush, low service cost.

High efficiency AC system is not only with full protection functions but also with the self equipped temperature sensor, speed sensor, which provides better reliability and long working life time.

SAFETY SYSTEM

High frequency MOSFET controller provides accurate control of travelling, lifting, and better adjustable performance and better match with the motor.

Secure stopping on ramp function is also provided thanks to MOSFET controller.

Motor brake is for regenerative braking during deceleration, direction changing, and downward slope. The regenerative braking is more energy saving and effectively.

EASY MAINTENANCE

Full opened battery cover is easy for battery service.

The controller is enclosed to avoid dust and water, and the cover is easy opened.

The applied world famous controllers, connectors, battery plug, emergency switch, and dashboard are to ensure the reliability of the performance and provide easy service.

Emergency switch is standard specification which meets the Euro safety regulation.

There's overloading protection for electronics and hydraulic system.

The whole truck meets CE certificate.

STANDARD SPECIFICATIONS

- High efficiency AC driving motor
- Special for truck's lifting motor
- Multi-functions dashboard
- Full electronic controlled travelling, lifting and steering
- Front lighting system, turning indicator, LED combined three colors' rear lights
- Big dimension rubber pad
- Sheet metal stamping made front and rear bottom plate
- Sheet metal stamping made left and right cover and battery cover
- Standard battery
- Reversing beeper
- Full hydraulic steering
- Storage box
- Soft landing system
- Standard forks in red
- 3m duplex mast
- Tow coupling
- Center located rear view mirror

OPTIONS

- Side way battery change
- Big capacity Chinese made battery
- Cold store application
- High performance import battery
- Battery charger
- Rear lighting system
- Front dual tyre
- SE tyre
- Non-marking tyre
- Suspension seat with higher OHG
- Left and right rear view mirror
- Reversing hand grip with horn button
- Wider fork carriage
- Wide or higher load backrest
- Other dimension forks
- Duplex mast with full free lift
- Triplex mast
- Integrated side shift
- Other attachments

New designed sideway battery changing is an option to meet different customer requirement. And which is very suitable for two or three shifts working.

- Advance ergonomically design cab, better operator comfort
- Parking brake design meets ISO3691
- Customaries color
- Battery cover with auto lock spring for easy battery service and replacing
- Advanced import AC controller (new series)
- Easy opened counter weight cover, to protect internal controller to avoid water and dust.
- Advanced transverse layout driving component.
- Sideway battery change option, easy to replacing battery
- Battery with lifting holes, no need to equip trolley, and battery can be put on ground to saving space and cost.
- Big LED dashboard, fault code shown in English
- Big dimension rubber pad

LOAD CHART

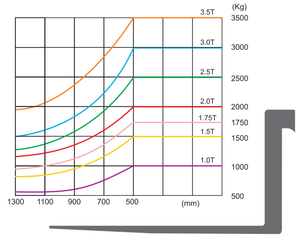

DIMENSIONS

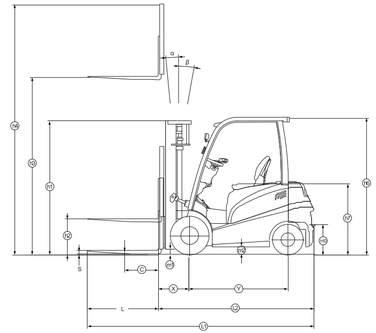

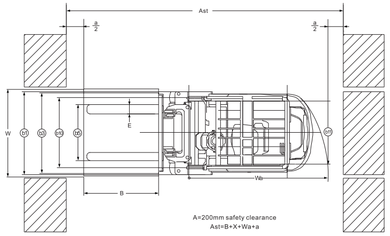

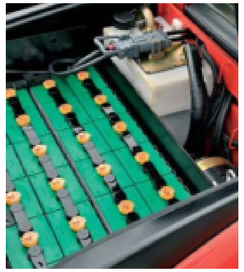

A series 1.0-3.5t electric forklift specification:

Distinguishing mark	1.1	Manufacturer (abbreviation)	HANGCHA																											
	1.2	Manufacturers type designation		CPD10-AC3	CPD15-AC3	CPD18-AC3	CPD20-AC3	CPD25-AC3	CPD25-ALC3	CPD30-AC3	CPD35-AC3	CPD10-AC4	CPD15-AC4	CPD18-AC4	CPD20-AC4	CPD25-AC4	CPD25-ALC4	CPD30-AC4	CPD35-AC4	CPD10-AD2	CPD15-AD2	CPD18-AD2	CPD20-AD2	CPD25-AD2	CPD25-ALD2	CPD30-AD2	CPD35-AD2
	1.3	Drive: electric (battery or mains), diesel, petrol, fuel gas		electric	electric	electric	electric	electric	electric	electric	electric	electric	electric	electric	electric	electric	electric	electric	electric	electric	electric	electric	electric	electric	electric	electric	electric
	1.4	Operator type: hand, pedestrian, standing, seated, order-picker		seated	seated	seated	seated	seated	seated	seated	seated	seated	seated	seated	seated	seated	seated	seated	seated	seated	seated	seated	seated	seated	seated	seated	seated
	1.5	Load capacity/rated load	Q (kg)	1000	1500	1750	2000	2500	2500	3000	3500	1000	1500	1750	2000	2500	2500	3000	3500	1000	1500	1750	2000	2500	2500	3000	3500
	1.6	Load centre distance	c (mm)	500	500	500	500	500	500	500	500	500	500	500	500	500	500	500	500	500	500	500	500	500	500	500	500
	1.8	Load distance, centre of drive axle to fork	x (mm)	406	406	406	455	455	455	475	475	406	406	406	455	455	455	475	475	406	406	406	455	455	455	475	475
	1.9	Wheelbase	y (mm)	1380	1380	1380	1485	1485	1625	1625	1625	1380	1380	1380	1485	1485	1625	1625	1625	1380	1380	1380	1485	1485	1625	1625	1625
Weight	2.1	Service Weight	kg	2940	2940	3090	3700	4180	4580	5050	5450	2940	2940	3090	3700	4180	4580	5050	5450	2940	2940	3090	3700	4180	4580	5050	5450
	2.2	Axle loading, laden front/rear	kg	3900/540	3900/540	4300/590	5016/684	5920/760	6335/725	7160/890	8020/930	3900/540	3900/540	4300/590	5016/684	5920/760	6355/725	7160/890	8020/930	3900/540	3900/540	4300/590	5016/684	5920/760	6355/725	7160/890	8020/930
	2.3	Axle loading, unladen front/rear	kg	1353/1587	1353/1587	1440/1650	1628/2072	1780/2400	2130/2450	2424/2626	2450/3000	1353/1587	1353/1587	1440/1650	1628/2072	1780/2400	2130/2450	2424/2626	2450/3000	1353/1587	1353/1587	1440/1650	1628/2072	1780/2400	2130/2450	2424/2626	2450/3000
Tyres, chassis	3.1	Tyres: solid rubber, superelastic, pneumatic, polyurethane		Pneumatic	Pneumatic	Pneumatic	Pneumatic	Pneumatic	Pneumatic	Pneumatic	super elastic	Pneumatic	Pneumatic	Pneumatic	Pneumatic	Pneumatic	Pneumatic	Pneumatic	super elastic	Pneumatic	Pneumatic	Pneumatic	Pneumatic	Pneumatic	Pneumatic	Pneumatic	super elastic
	3.2	Tyre size, front		6.00 - 9	6.00 - 9	21x8 - 9	23x9-10	23x9-10	23x9-10	23x9-10	23x10-12	6.00-9	6.00-9	21x8-9	23x9-10	23x9-10	23x9-10	23x9-10	23x10-12	6.00 - 9	6.00 - 9	21x8 - 9	23x9-10	23x9-10	23x9-10	23x9-10	23x10-12
	3.3	Tyre size, rear		5.00 - 8	5.00 - 8	5.00 - 8	18x7 - 8	18x7 - 8	18x7 - 8	18x7 - 8	200/50-10	5.00-8	5.00-8	5.00-8	18x7 - 8	18x7 - 8	18x7 - 8	18x7 - 8	200/50-10	5.00 - 8	5.00 - 8	5.00 - 8	18x7 - 8	18x7 - 8	18x7 - 8	18x7 - 8	200/50-10
	3.5	Wheels, number front rear (x = driven wheels)		2x/2	2x/2	2x/2	2x/2	2x/2	2x/2	2x/2	2x/2	2x/2	2x/2	2x/2	2x/2	2x/2	2x/2	2x/2	2x/2	2x/2	2x/2	2x/2	2x/2	2x/2	2x/2	2x/2	2x/2
	3.6	Tread, front	b10(mm)	888	888	938	1058	1058	1058	1058	1068	888	888	938	1058	1058	1058	1058	1068	888	888	938	1058	1058	1058	1058	1068
	3.7	Tread, rear	b11(mm)	897.5	897.5	897.5	960	960	960	960	960	897.5	897.5	897.5	960	960	960	960	960	897.5	897.5	897.5	960	960	960	960	960
Dimensions	4.1	Tilt of mast/fork carriage forward/backward	Grad	5/10	5/10	5/10	5/10	5/10	5/10	5/10	5/10	5/10	5/10	5/10	5/10	5/10	5/10	5/10	5/10	5/10	5/10	5/10	5/10	5/10	5/10	5/10	5/10
	4.2	Height, mast lowered	h1(mm)	1976	1976	1976	2006	2006	2006	2186	2186	1976	1976	1976	2006	2006	2006	2186	2186	1976	1976	1976	2006	2006	2006	2186	2186
	4.3	Free lift	h2(mm)	145	145	145	140	140	140	145	145	135	135	135	140	140	140	145	145	135	135	135	140	140	140	145	145
	4.5	Lift	h3(mm)	3000	3000	3000	3000	3000	3000	3000	3000	3000	3000	3000	3000	3000	3000	3000	3000	3000	3000	3000	3000	3000	3000	3000	3000
	4.6	Height, mast extended	h4(mm)	3955	3955	3955	4056	4056	4056	4152	4152	3955	3955	3955	4056	4056	4056	4152	4152	3955	3955	3955	4056	4056	4056	4152	4152
	4.7	Height of overhead guard STD.	h6(mm)	2050	2050	2050	2075	2075	2110	2110	2110	2050	2050	2050	2075	2075	2110	2110	2110	2050	2050	2050	2075	2075	2110	2110	2110
	4.8	Height of higher overhead guard OPT.	h6(mm)	2130	2130	2130	2155	2155	2190	2190	2190	2130	2130	2130	2155	2155	2190	2190	2190	2130	2130	2130	2155	2155	2190	2190	2190
	4.9	Seat height/stand height	h7(mm)	1045	1045	1045	1070	1070	1070	1070	1070	1045	1045	1045	1070	1070	1070	1070	1070	1045	1045	1045	1070	1070	1070	1070	1070
	4.12	Coupling height	h10(mm)	275	275	275	303	303	303	303	303	275	275	275	303	303	303	303	303	275	275	275	303	303	303	303	303
	4.19	Overall length	l1(mm)	3018	3018	3018	3412	3412	3552	3572	3652	3018	3018	3018	3412	3412	3552	3572	3652	3018	3018	3018	3412	3412	3552	3572	3652
	4.20	Length to face of forks	l2(mm)	2098	2098	2098	2342	2342	2482	2502	2582	2098	2098	2098	2342	2342	2482	2502	2582	2098	2098	2098	2342	2342	2482	2502	2582
	4.21	Overall width	b1(mm)	1120	1120	1138	1265	1265	1265	1265	1302	1120	1120	1138	1265	1265	1265	1265	1302	1120	1120	1138	1265	1265	1265	1265	1302
	4.22	Fork dimensions	s/e/l(mm)	35/100/920	35/100/920	35/100/920	40/122/1070	40/122/1070	40/122/1070	45/125/1070	50／125／1070	35／100／920	35／100／920	35／100／920	40/122/1070	40/122/1070	40/122/1070	45/125/1070	50/125/1070	35／100／920	35／100／920	35／100／920	40/122/1070	40/122/1070	40/122/1070	45/125/1070	50／125／1070
	4.23	Fork carriage DIN 15 173 --- ISO 2328, class/type A,B		ISO2328 2A	ISO2328 2A	ISO2328 2A	ISO2328 2A	ISO2328 2A	ISO2328 2A	ISO2328 3A	ISO2328 3A	ISO2328 2A	ISO2328 2A	ISO2328 2A	ISO2328 2A	ISO2328 2A	ISO2328 2A	ISO2328 3A	ISO2328 3A	ISO2328 2A	ISO2328 2A	ISO2328 2A	ISO2328 2A	ISO2328 2A	ISO2328 2A	ISO2328 3A	ISO2328 3A
	4.24	Fork-carriage width	b3(mm)	1072	1072	1072	1118	1118	1118	1200	1200	1072	1072	1072	1118	1118	1118	1200	1200	1072	1072	1072	1118	1118	1118	1200	1200
	4.25	Distance between fork-arms	b5(mm)	240/1000	240/1000	240/1000	240/1038	240/1038	240/1038	290/1100	290/1100	240/1000	240/1000	240/1000	240/1038	240/1038	240/1038	290/1100	290/1100	240/1000	240/1000	240/1000	240/1038	240/1038	240/1038	290/1100	290/1100
	4.31	Ground clearance, laden, below mast	m1(mm)	100	100	100	112	112	112	115	115	100	100	100	112	112	112	115	115	100	100	100	112	112	112	115	115
	4.32	Ground clearance, centre of wheelbase	m2(mm)	110	110	110	120	120	125	125	125	110	110	110	120	120	125	125	125	110	110	110	120	120	125	125	125
	4.33	Aisle width for pallets 1000 x 1200 crossways	Ast(mm)	3506	3506	3506	3745	3745	3885	3905	3985	3506	3506	3506	3745	3745	3885	3905	3985	3506	3506	3506	3745	3745	3885	3905	3985
	4.34	Aisle width for pallets 800 x 1200 crossways	Ast(mm)	3706	3706	3706	3945	3945	4085	4105	4185	3706	3706	3706	3945	3945	4085	4105	4185	3706	3706	3706	3945	3945	4085	4105	4185
	4.35	Turning radius	Wa(mm)	1900	1900	1900	2090	2090	2230	2230	2310	1900	1900	1900	2090	2090	2230	2230	2310	1900	1900	1900	2090	2090	2230	2230	2310
	4.36	Internal turning radius	b13(mm)	620	620	680	730	730	730	730	730	620	620	680	730	730	730	730	730	620	620	680	730	730	730	730	730
Performance data	5.1	Travel speed, laden/unladen	km/h	14/14	14/14	13.5/14	14/14	14/14	14/14	14/14	12／13	14/14	14/14	13.5/14	14/14	14/14	14/14	14/14	12／13	14/14	14/14	13.5/14	14/14	14/14	14/14	14/14	12／13
	5.2	Lift speed, laden/unladen	mm/s	290/440	290/440	285/440	280/440	230/430	230/430	250/400	210/400	290/440	290/440	285/440	280/440	230/430	230/430	250/400	210/400	290/440	290/440	285/440	280/440	230/430	230/430	250/400	210/400
	5.3	Lowering speed, laden/unladen	mm/s	300/410	300/410	275/420	285/420	215/410	215/410	260/390	260/370	300/410	300/410	275/420	285/420	215/410	215/410	260/390	260/370	300/410	300/410	275/420	285/420	215/410	215/410	260/390	260/370
	5.5	Drawbar pull, laden/unladen	N	9000/10000	9000/10000	9500/11000	12000/12500	16000/17000	16000/17000	20000 /21000	20500/21000	9000/10000	9000/10000	9500/11000	12000/12500	16000/17000	16000/17000	20000 /21000	20500/21000	9000/10000	9000/10000	9500/11000	12000/12500	16000/17000	16000/17000	20000 /21000	20500/21000
	5.6	Max. Drawbar pull, laden/unladen	N	11000	11000	12000	14000	18000	18000	22000	23000	11000	11000	12000	14000	18000	18000	22000	23000	11000	11000	12000	14000	18000	18000	22000	23000
	5.7	Gradeability, laden/unladen	%	12/13	12/13	12/13	11/12	11/12	11/12	11/12	11/12	12/13	12/13	12/13	11/12	11/12	11/12	11/12	11/12	12/13	12/13	12/13	11/12	11/12	11/12	11/12	11/12
	5.8	Max. gradeability, laden/unladen	%	15/16	15/16	15/16	13/14	13/14	13/14	13/14	13/14	15/16	15/16	15/16	13/14	13/14	13/14	13/14	13/14	15/16	15/16	15/16	13/14	13/14	13/14	13/14	13/14
	5.9	Acceleration time, laden/unladen (0-10m)	s	5.0/5.3	5.0/5.3	5.1/5.3	5.2/4.6	5.3/4.7	5.3/5	5.3/5	5.5/5.2	5.0/5.3	5.0/5.3	5.1/5.3	5.2/4.6	5.3/4.7	5.3/5	5.3/5	5.5/5.2	5.0/5.3	5.0/5.3	5.1/5.3	5.2/4.6	5.3/4.7	5.3/5	5.3/5	5.5/5.2
	5.10	Service brake		Hydraulic	Hydraulic	Hydraulic	Hydraulic	Hydraulic	Hydraulic	Hydraulic	Hydraulic	Hydraulic	Hydraulic	Hydraulic	Hydraulic	Hydraulic	Hydraulic	Hydraulic	Hydraulic	Hydraulic	Hydraulic	Hydraulic	Hydraulic	Hydraulic	Hydraulic	Hydraulic	Hydraulic
	5.11	Parking brake		Mechanical	Mechanical	Mechanical	Mechanical	Mechanical	Mechanical	Mechanical	Mechanical	Mechanical	Mechanical	Mechanical	Mechanical	Mechanical	Mechanical	Mechanical	Mechanical	Mechanical	Mechanical	Mechanical	Mechanical	Mechanical	Mechanical	Mechanical	Mechanical
Electricengine	6.1	Drive motor rating S2 60 min	kW	8 AC	8 AC	8AC	11 AC	11 AC	15 AC	15AC	15AC	8 AC	8 AC	8 AC	11 AC	11 AC	15 AC	15AC	15AC	8 AC	8 AC	8AC	11 AC	11 AC	15 AC	15AC	15AC
	6.2	Lift motor rating at S3 15%	kW	8.2 DC	8.2 DC	8.2 DC	8.6 DC	8.6 DC	10 DC	10 DC	10 DC	8.6 AC	8.6 AC	8.6 AC	8.6 AC	8.6 AC	10 AC	10AC	10 AC	8.6 AC	8.6 AC	8.6 AC	8.6 AC	8.6 AC	10 AC	10 AC	10 AC
	6.3	Battery acc. to DIN 43 531/35/36 A,B,C, no		No	No	No	No	No	No	No	No	No	No	No	No	No	No	No	No	No	No	No	No	No	No	No	No
	6.4	Battery voltage, nominal capacity K5	V/Ah	48/420	48/420	48/420	48/630	48/630	80/500	80/500	80/500	48/420	48/420	48/420	48/630	48/630	80/500	80/500	80/500	48/420	48/420	48/420	48/630	48/630	80/500	80/500	80/500
	6.5	Battery weight	kg	760	760	760	760	1050	1050	1530	1530	1530	760	760	1050	1050	1530	1530	1530	760	760	760	1050	1050	1530	1530	1530
	6.6	Battery dimensions	l/b/h(mm)	980×465×780	980×465×780	980×465×780	1028×570×780	1028×570×780	1028×710×780	1028×710×780	1028×710×780	980×465×780	980×465×780	980×465×780	1028×570×780	1028×570×780	1028×710×780	1028×710×780	1028×710×780	980×465×780	980×465×780	980×465×780	1028×570×780	1028×570×780	1028×710×780	1028×710×780	1028×710×780
	6.7	Energy consumption acc. to VDI cycle	kWh/h	4.4	4.4	4.6	5.0	5.8	5.8	6.5	6.7	4.4	4.4	4.6	5.0	5.8	5.8	6.5	6.7	4.4	4.4	4.6	5.0	5.8	5.8	6.5	6.7
	6.8	Max. battery weight	kg	700	700	700	930	930	1200	1200	1200	700	700	700	930	930	1200	1200	1200	700	700	700	930	930	1200	1200	1200
	6.9	Min.battery weight	kg	900	900	900	1200	1200	1550	1550	1550	900	900	900	1200	1200	1550	1550	1550	900	900	900	1200	1200	1550	1550	1550
Addition data	8.1	Type of drive control		MOSFET/AC	MOSFET/AC	MOSFET/AC	MOSFET/AC	MOSFET/AC	MOSFET/AC	MOSFET/AC	MOSFET/AC	MOSFET/AC	MOSFET/AC	MOSFET/AC	MOSFET/AC	MOSFET/AC	MOSFET/AC	MOSFET/AC	MOSFET/AC	MOSFET/AC	MOSFET/AC	MOSFET/AC	MOSFET/AC	MOSFET/AC	MOSFET/AC	MOSFET/AC	MOSFET/AC
		Manufacturer		CURTIS	CURTIS	CURTIS	CURTIS	CURTIS	CURTIS	CURTIS	CURTIS	CURTIS	CURTIS	CURTIS	CURTIS	CURTIS	CURTIS	CURTIS	CURTIS	KOLLMORGEN							
		Type		1234+1253	1234+1253	1234+1253	1236+1253	1236+1253	1236+1253	1236+1253	1238+1253	1234+1234	1234+1234	1234+1234	1236+1234	1236+1234	1236+1236	1236+1236	1238+1236	ACS48S-35P+ACS48S-23P			ACS48M-35P+ACS48M-23P		ACS80M-35P+ACS80M-23P		
	8.2	Operating pressure for attachments	bar	145	145	145	175	175	175	175	175	145	145	145	175	175	175	175	175	145	145	145	175	175	175	175	175
	8.3	Oil volume for attachments	l/min	65	65	65	65	65	65	65	65	65	65	65	65	65	65	65	65	65	65	65	65	65	65	65	65
	8.4	Sound level at the driver´s ear according to EN / DIN 12 053	db(a)	72	72	73	73	74	74	74	74	72	72	73	73	74	74	74	74	72	72	73	73	74	74	74	74
	8.5	Towing coupling, type DIN		Φ24 Pin	Φ24 Pin	Φ24 Pin	Φ24 Pin	Φ24 Pin	Φ24 Pin	Φ24 Pin	Φ24 Pin	Φ24 Pin	Φ24 Pin	Φ24 Pin	Φ24 Pin	Φ24 Pin	Φ24 Pin	Φ24 Pin	Φ24 Pin	Φ24 Pin	Φ24 Pin	Φ24 Pin	Φ24 Pin	Φ24 Pin	Φ24 Pin	Φ24 Pin	Φ24 Pin
	9.1	Hydraulic Tank - capacity (drain & refill)	liter(gal)	22	22	22	22	22	22	24	24	22	22	22	22	22	22	24	24	22	22	22	22	22	22	24	24

AC3: means Curtis AC traveling system with DC Pump system, semi-AC system
AC4: means Curtis AC traveling system with AC Pump system, full-AC system
AD2: means Danaher AC traveling system with AC Pump system,full AC system

■ Specifications are subject to change without notice.

1.0-1.8t A series mast specification:

Type	Model	Lifting height	Lowered overall height	Overall height		Free lifting height		Tilt range		Capacity (Mast vertical to ground)					
				With backrest	Without backrest	With backrest	Without backrest	FWD	BWD	Load center@500mm Single Tire			Load center@500mm Front Dual Tire		
										1.0t	1.5t	1.75t	1.0t	1.5t	1.75t
		mm	mm	mm	mm	mm	mm	(°)	(°)	kg	kg	kg	kg	kg	kg
2-stage wide view mast	M250	2500	1726	3455	3064	145	145	5	10	1000	1500	1750	1000	1500	1750
	M270	2700	1826	3655	3264	145	145	5	10	1000	1500	1750	1000	1500	1750
	M300	3000	1976	3955	3564	145	145	5	10	1000	1500	1750	1000	1500	1750
	M330	3300	2126	4255	3864	145	145	5	10	1000	1500	1750	1000	1500	1750
	M350	3500	2226	4455	4064	145	145	5	10	1000	1500	1750	1000	1500	1750
	M360	3600	2326	4555	4164	145	145	5	10	960	1450	1750	960	1450	1750
	M400	4000	2526	4955	4564	145	145	5	10	930	1400	1700	930	1400	1700
	M430	4300	2726	5255	4864	145	145	5	6	850	1300	1550	910	1350	1650
	M450	4500	2826	5455	5064	145	145	5	6	800	1200	1450	900	1300	1600
2-stage full-free lifting mast	U250	2500	1726	3455	3070	781	1158	5	10	1000	1500	1750	1000	1500	1750
	U270	2700	1826	3655	3270	881	1244	5	10	1000	1500	1750	1000	1500	1750
	U300	3000	1976	3955	3570	1031	1394	5	10	1000	1500	1750	1000	1500	1750
	U330	3300	2126	4255	3870	1181	1544	5	10	1000	1500	1750	1000	1500	1750
	U360	3600	2276	4555	4170	1331	1694	5	10	900	1350	1750	930	1450	1750
	U400	4000	2526	4955	4570	1581	1944	5	6	850	1300	1650	900	1350	1600
3-stage full-free lifting mast	N400	4000	1976	4955	4570	1031	1416	5	6	900	1350	1600	930	1400	1700
	N430	4300	2076	5255	4870	1131	1516	5	6	850	1300	1550	850	1350	1600
	N450	4500	2086	5455	5070	1141	1614	5	6	800	1200	1450	800	1250	1500
	N480	4800	2201	5755	5370	1256	1641	5	6	650	1100	1300	700	1200	1350
	N500	5000	2251	5955	5570	1306	1691	5	6	600	1000	1200	650	1050	1250
	N550	5500	2426	6455	6070	1481	1866	3	6	500	700	800	550	750	900
	N600	6000	2651	6955	6570	1706	2091	3	6	300	450	600	350	500	650
	N650	6500	2830	7456	7070	1820	2152	3	6	200	250	350	300	400	500

▪ With sideshift minus 150kg,with integrated sideshift minus 100kg. ▪ With solid tyre,load capacity increase 50kg.

2.0-2.5t A series mast specification:

Type	Model	lifting height	Lowered	Overall height		Free lifting height		Tilting range		Capacity (Mast vertical to ground)							
				With backrest	Without backrest	With backrest	Without backrest	FWD	BWD	Load center@500mm Single Tire		Load center@500mm Front Dual Tire		Load center@24in Single Tire		Load center@24in Front Dual Tire	
										2t	2.5t	2t	2.5t	4000	5000	4000	5000
		mm	mm	mm	mm	mm	mm	(°)	(°)	kg	kg	kg	kg	lbs	lbs	lbs	lbs
2-stage wide mast	M250	2500	1786	3556	3234	140	140	5	10	2000	2500	2000	2500	4000	5000	4000	5000
	M270	2700	1886	3756	3434	140	140	5	10	2000	2500	2000	2500	4000	5000	4000	5000
	M300	3000	2006	4056	3734	140	140	5	10	2000	2500	2000	2500	4000	5000	4000	5000
	M330	3300	2186	4356	4034	140	140	5	10	2000	2500	2000	2500	4000	5000	4000	5000
	M350	3500	2286	4556	4234	140	140	5	10	2000	2500	2000	2500	4000	5000	4000	5000
	M360	3600	2336	4656	4334	140	140	5	10	2000	2500	2000	2500	4000	5000	4000	5000
	M400	4000	2586	5056	4734	140	140	5	10	1900	2300	1950	2400	3800	4600	3900	4800
	M430	4300	2751	5356	5034	140	140	5	6	1800	2100	1900	2300	3600	4200	3800	4600
	M450	4500	2861	5556	5234	140	140	5	6	1700	2000	1800	2200	3400	4000	3600	4400
2-stage full-free lifting mast	U250	2500	1766	3556	3185	720	1091	5	10	2000	2500	2000	2500	4000	5000	4000	5000
	U270	2700	1866	3756	3385	820	1191	5	10	2000	2500	2000	2500	4000	5000	4000	5000
	U300	3000	1966	4056	3685	920	1291	5	10	2000	2500	2000	2500	4000	5000	4000	5000
	U330	3300	2116	4356	3985	1070	1441	5	10	2000	2500	2000	2500	4000	5000	4000	5000
	U360	3600	2266	4656	4285	1220	1591	5	10	2000	2500	2000	2500	4000	5000	4000	5000
	U400	4000	2516	5056	4685	1470	1841	5	10	1900	2300	1950	2350	3800	4600	3900	4700
3-stage full-free lifting mast	N430	4300	1976	5356	5019	930	1267	5	6	1700	2000	1800	2250	3400	4000	3600	4500
	N450	4500	2096	5556	5219	1050	1387	5	6	1600	1900	1700	2150	3200	3800	3400	4300
	N480	4800	2196	5856	5519	1150	1487	5	6	1500	1700	1600	2100	3000	3400	3200	4200
	N500	5000	2261	6056	5719	1215	1552	5	6	1400	1600	1500	2000	2800	3200	3000	4000
	N550	5500	2426	6556	6219	1380	1717	3	6	1050	1200	1450	1900	2100	2400	2900	3800
	N600	6000	2641	7056	6719	1595	1932	3	6	700	800	1400	1600	1400	1600	2800	3200
	N650	6500	2820	7556	7219	1774	2111	3	6	500	650	1200	1300	1000	1300	2400	2600

▪ With sideshift minus 150kg,with integrated sideshift minus 100kg. ▪ With solid tyre,load capacity increase 80kg.